Self-Closing Wrap

Product views and bundle-size reference

01 SIDE & END VIEWS

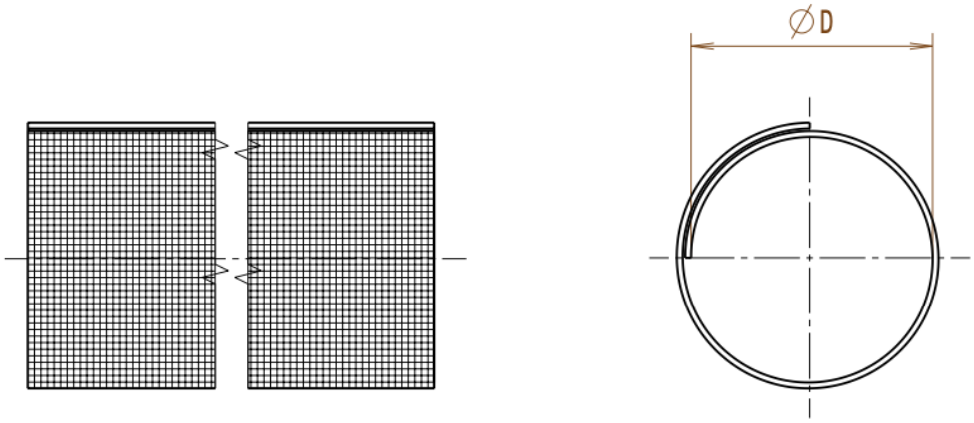

02 ISOMETRIC VIEW

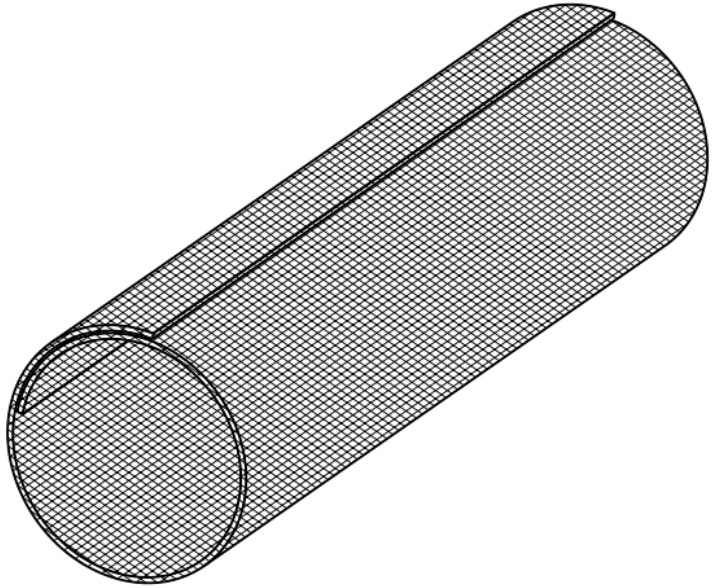

SIZES & ORDERING

Product code	D nom. (mm)	Bundle min.	Bundle max.	Roll length
SYN-SC-D05	5	4	5	200 m
SYN-SC-D08	8	5	8	200 m
SYN-SC-D13	13	10	13	200 m
SYN-SC-D19	19	16	19	200 m
SYN-SC-D25	25	19	25	200 m
SYN-SC-D29	29	25	29	200 m
SYN-SC-D32	32	29	32	200 m
SYN-SC-D38	38	32	38	200 m
SYN-SC-D50	50	38	50	200 m

REFERENCE NOTES

Self-closing wrap - dimensional reference views.
Views are illustrative and not to scale.

D = nominal diameter shown in the end view.
Bundle minimum and maximum are in millimetres.
Standard packaging: 200 metres per roll.

Select the product code using the bundle-size range.
Wall thickness, overlap and tolerances are not specified.
Contact Synflex for application-specific requirements.